Toyota Camry V6

OVERSHADOWED BY ITS RIVALS AND underrated by customers, the Camry V6 is something of a dark horse in the executive car stable. Although it fails to match the BMW 520i's superbly insulating ride and there's no feel to the steering, it counters with a creamy smooth V6 engine that gives vivacious performance. In fact, from being sublimely silent when cruising (though tyre noise is prevalent at times), it will burst into a glorious thrust of neck-bending acceleration when you open the throttle wide, and emits a wonderful warble on full song. Taking advantage of the performance available does the fuel consumption no favours, however, but 32mpg is possible if you drive gently.

The engine is superbly complemented by a "thinking" four-speed automatic transmission that serves up silky shifts and is clever at timing part-throttle downchanges. A Sport mode is made unnecessary by the system's ability to adapt to one's driving style.

Electric seat adjustments and tilt-adjustable steering tailor you a first-class driving position, and although the leather trim is slippery, it adds further class to an interior that's loaded with equipment and oozes quality and refinement. Cruise control is standard, as are electric windows, mirrors and sunroof.

There's plenty of space, too. Those in the back have room to stretch and relax in a pair of supportive seats, cooled by the climate-controlled air conditioning and soothed by the six-speaker sound system. Luggage is stowed in the reasonably roomy boot that has a high sill but a wide opening. Load space can be increased by folding the 60/40 split-fold back seat. There are several useful storage compartments in the cabin, and neat touches such as a socket for a mobile phone or a lap-top computer.

On the safety front, anti-lock brakes are standard and there are five three-point seatbelts, twin front airbags, side airbags and three adjustable rear head restraints. There are also side impact bars that help to put the Camry's performance in the Euro NCAP side-impact tests into the four-star category. Security is taken care of by perimeter and interior protection alarms and a transponder immobiliser.

The Camry V6 is the best-selling "sedan" in the States and deserves a warmer reception over here. It may not boast all the class-leading attributes and the kudos of some rivals, but for sheer reassurance – in terms of both reliability and safety – it's better than most. Don't overlook this unsung hero – it's well worth considering, especially as it's so temptingly priced.

PERFORMANCE

Acceleration time in seconds

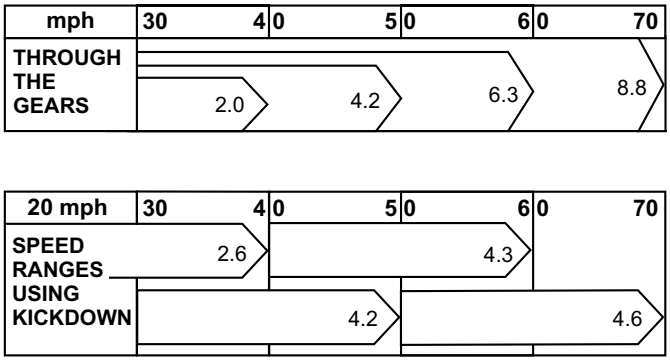

Maximum speeds

using accelerator kickdown

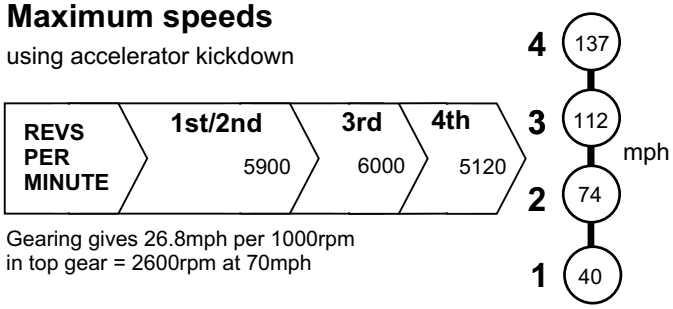

Gearing gives 26.8mph per 1000rpm in top gear = 2600rpm at 70mph

FUEL CONSUMPTION

Fuel grade : unleaded Premium, 95 octane	
Type of use – air conditioning off*	**mpg**
In the city – heavy traffic	18
In the country – quiet driving	32
Typical mpg overall	**24½**
Realistic tank range† litres/320miles	59

† based on fuel gauge/warning lamp and filling station experience – *not* nominal tank capacity

**with air conditioning switched on, consumption will increase by 2–4% in winter and 4–8% in summer*

MEASUREMENTS

Centimetres

Four-door saloon

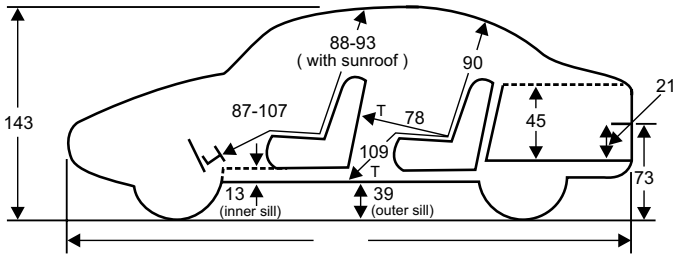

T: typical back seat space behind medium-sized front occupants

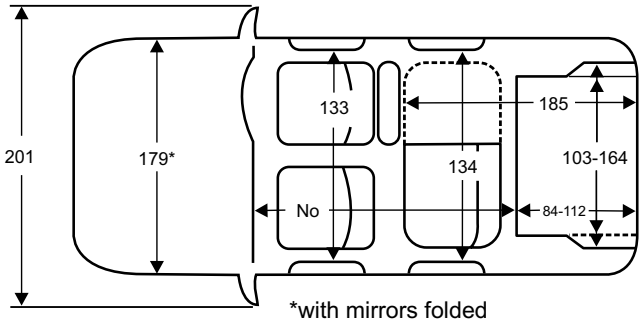

*with mirrors folded

HOW THE CAMRY COMPARES	Engine cap/power (cyl/cc/bhp)	Revs at 70mph (rpm)	30-70mph through gears (sec)	30-70mph in 5th/4th gears (sec)	Fuel economy (mpg)	Brakes† best stop (m/kg)	Maximum legroom - front (cm)	Typical leg/ kneeroom - rear (cm)	Steering turns/ (p) circle (m)	Overall length (cm)
TOYOTA CAMRY V6 (AUTO)	**V6/2995/188**	**2600**	**8.8**	**Auto**	**24½**	**26/18**	**107**	**109/79**	**3.1/11.6**	**476**
Audi A6 2.4SE	V6/2393/165	3100	8.8	21.6/15.2	30½	23/19	109	100/74	2.8/11.15	480
BMW 523i SE	6/2494/170	**2980**	8.1	**24.1/16.9**	30	**23½/18**	116	103/76	3.0/11.0	478
Mercedes Benz E240 (Auto)	V6/2398/170	**2870**	9.7	**Auto**	**26½**	26/16	**120**	112/79	**3.2/10.6**	**479**
Saab 9-5 2.0t	4/1985/150	**2350**	**9.5**	**30.7/16.3**	**31½**	**25½/32**	**110**	103/79	**2.9/11.0**	**482**
Volvo S80 2.0SE (Auto)	6/2922/204	**2500**	**8.3**	Auto	**24**	25½/20	**112**	114/80	**3.0/11.6**	**482**

† all with ABS

© The Automobile Association 1999